TSK
Growth through innovation

Soluciones avanzadas de hibridación y almacenamiento

La experiencia de TSK

genera

Madrid, June 15th, 2022

TSK

TSK somos una compañía tecnológica y de servicios, que ofrece soluciones eficientes, sostenibles y digitales para el sector industrial y energético

DIVERSIFICACIÓN DE **MERCADOS**

04

 # Nuestra Compañía

DIVERSIFICACIÓN DE **SECTORES**

Líder en el desarrollo de tecnologías y servicios para la industria y el sector energético

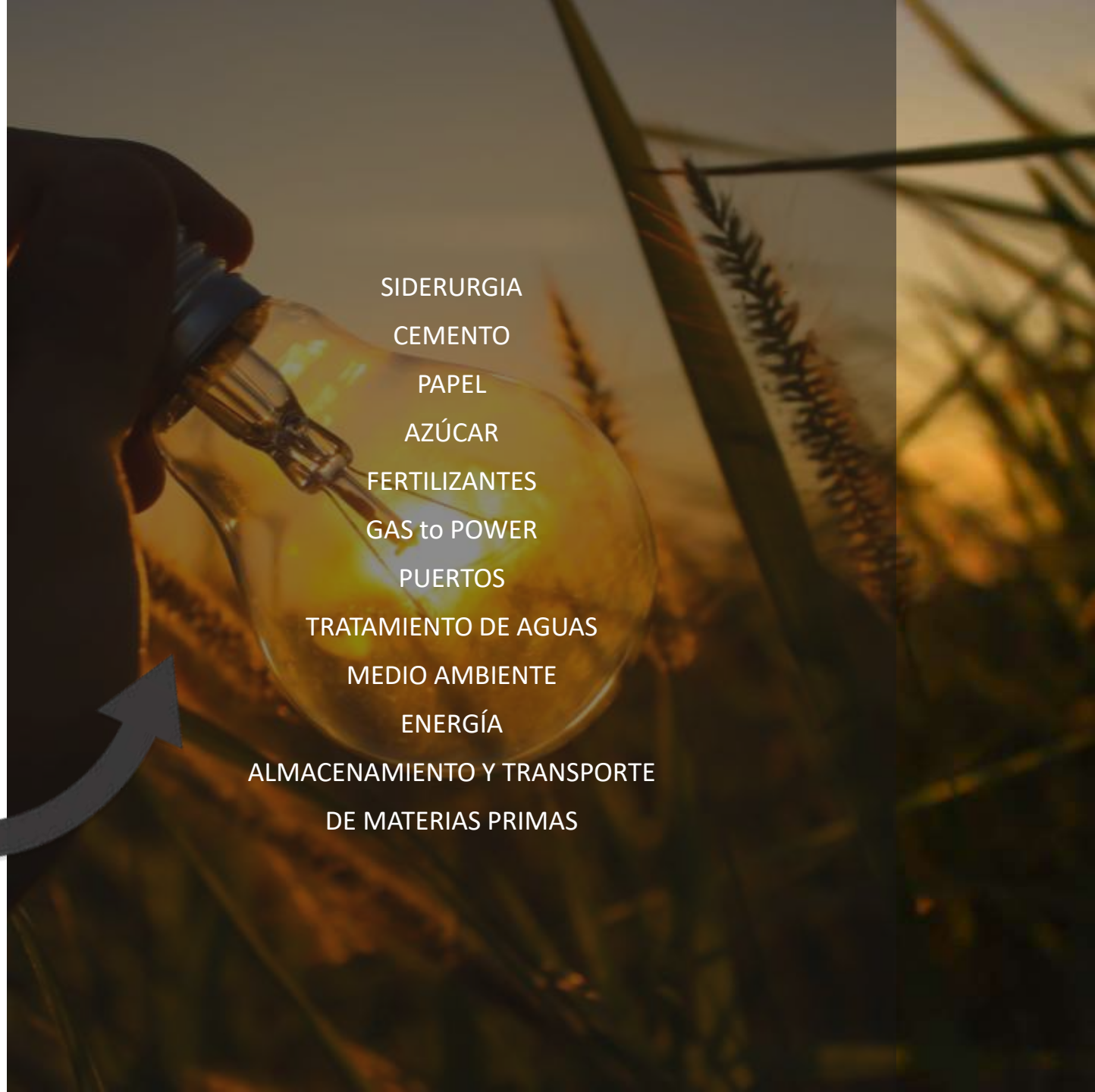

SIDERURGIA

CEMENTO

PAPEL

AZÚCAR

FERTILIZANTES

GAS to POWER

PUERTOS

TRATAMIENTO DE AGUAS

MEDIO AMBIENTE

ENERGÍA

ALMACENAMIENTO Y TRANSPORTE DE MATERIAS PRIMAS

05

 # Nuestras Soluciones

ENERGÍAS **RENOVABLES**

Dentro del sector de las Renovables, nuestras soluciones integran multitud de tecnologías en las más variadas disciplinas técnicas y sectores.

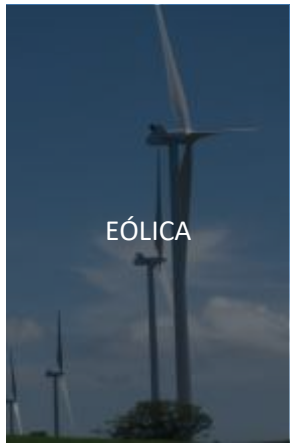

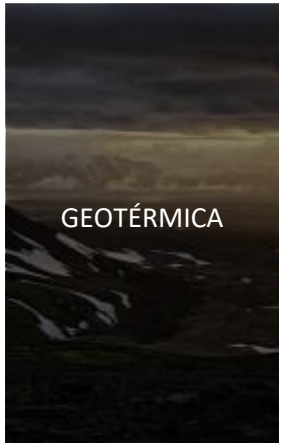

INDEX

1. Generation + storage hybrid mix
2. Hybrid projects
3. Potential solutions

Appendix: eTES and LAES comparison with other technologies

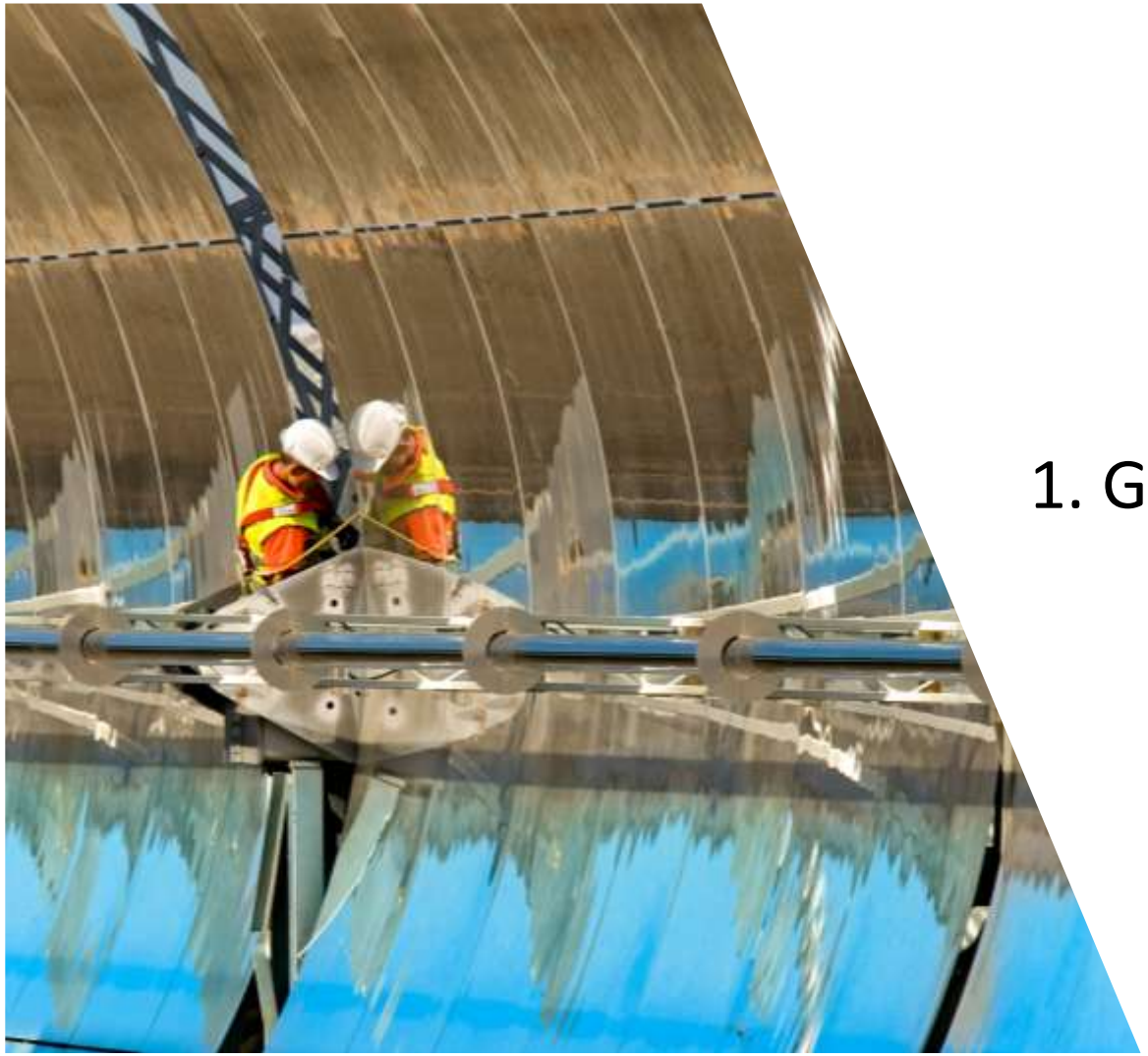

1. Generation + storage hybridization

TSK ENERGY STORAGE SOLUTIONS

MOLTEN SALT (eTES)

Tecnology developed by **TSK**, with more than 10 year experience in the field.

LIQUID AIR (LAES)

Technology developed by **Highview Power** with more than 15 year experience in the field.

MOLTEN SALT THERMAL ENERGY STORAGE (eTES)

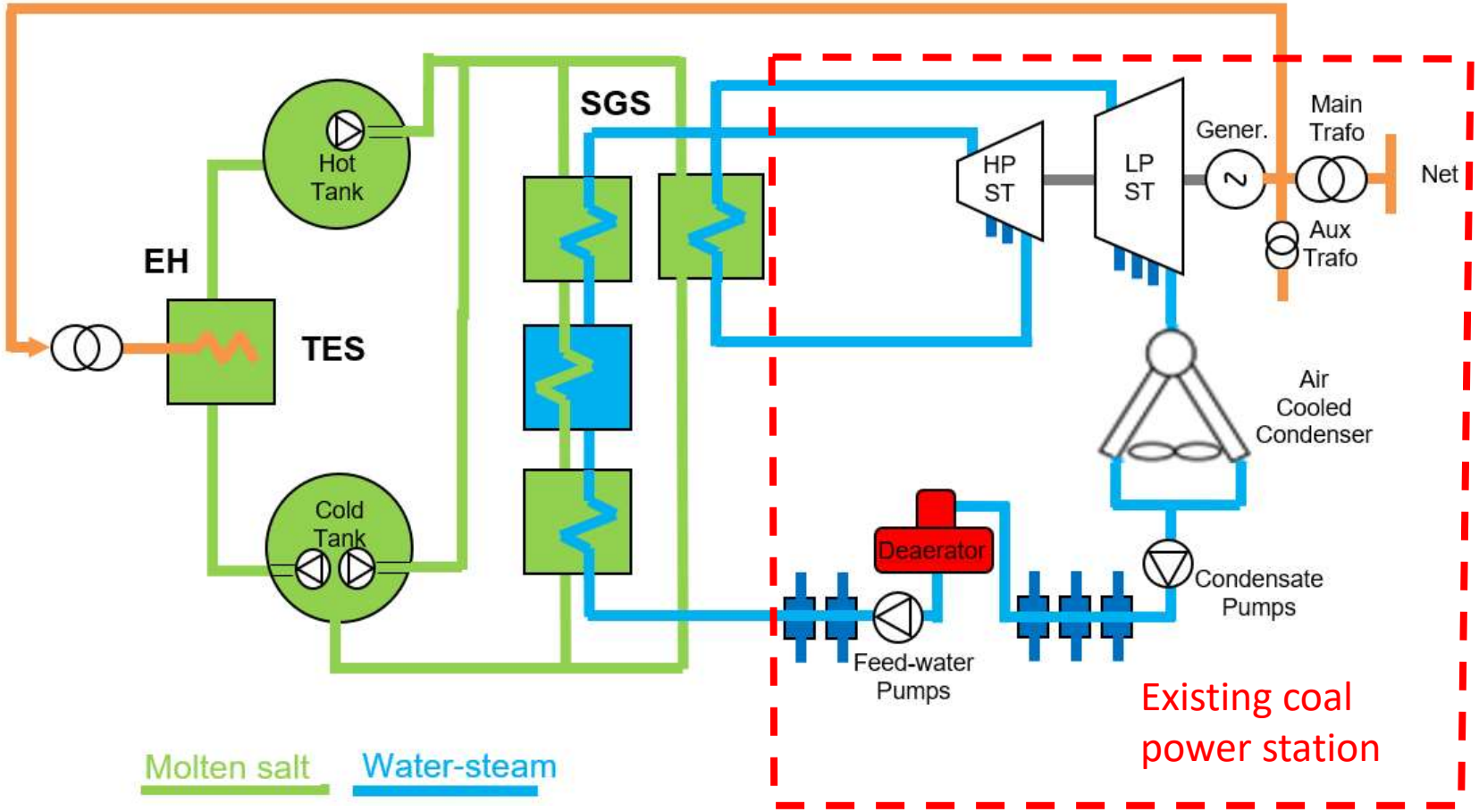

LIQUID AIR ENERGY STORAGE (LAES)

010

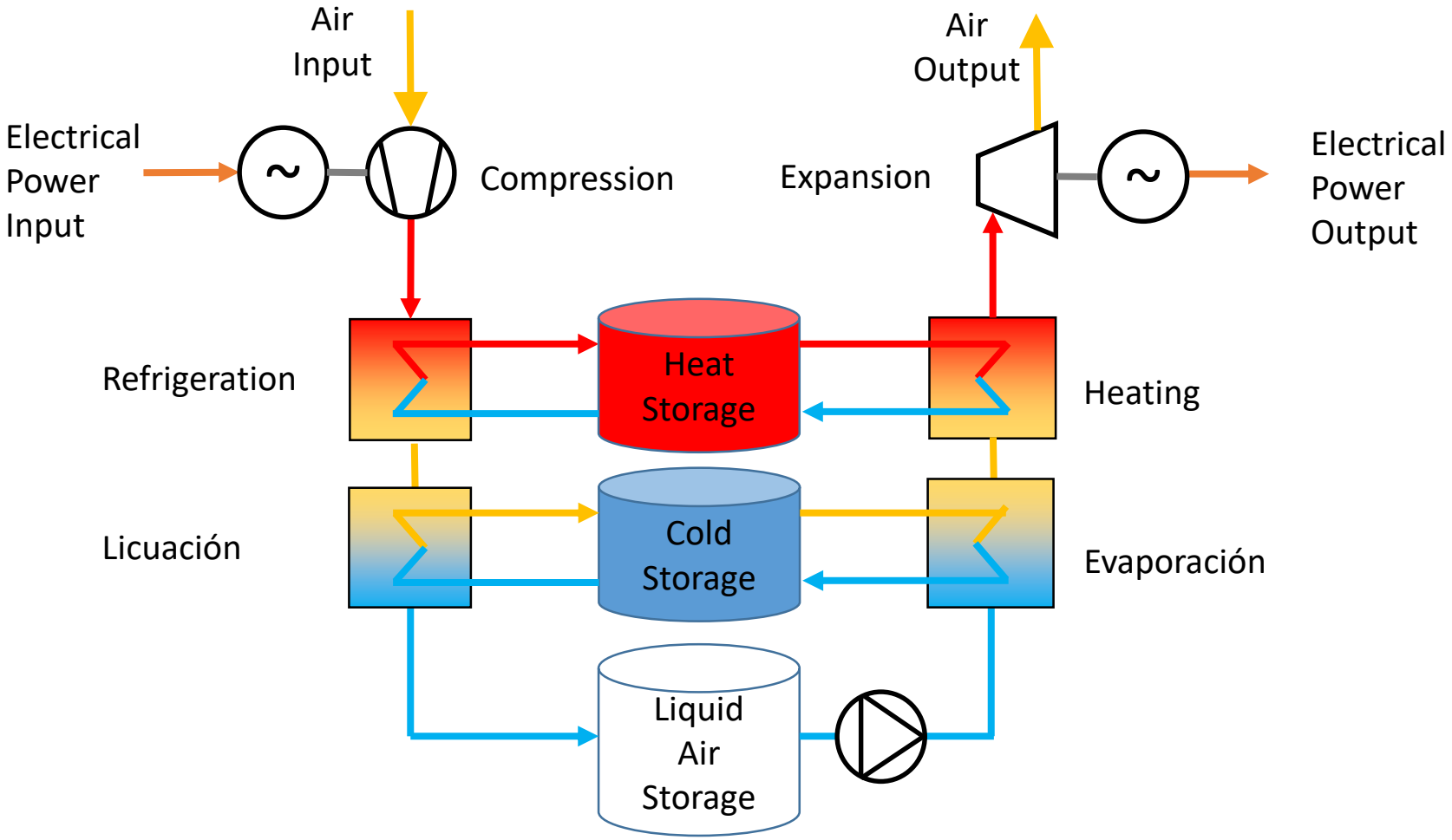

HYBRID MIX

011

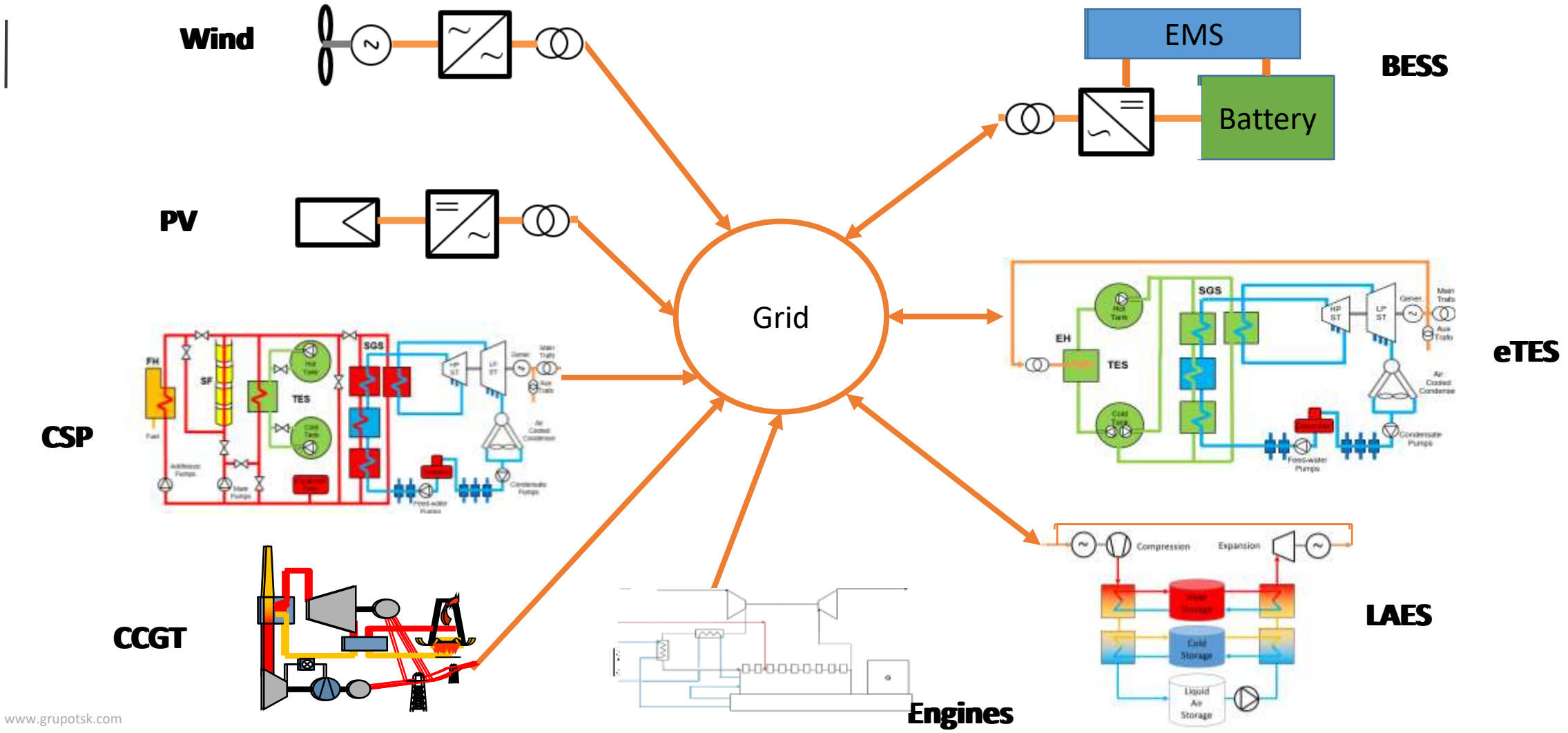

Hybrid Plant – Green H2 and NH3

012

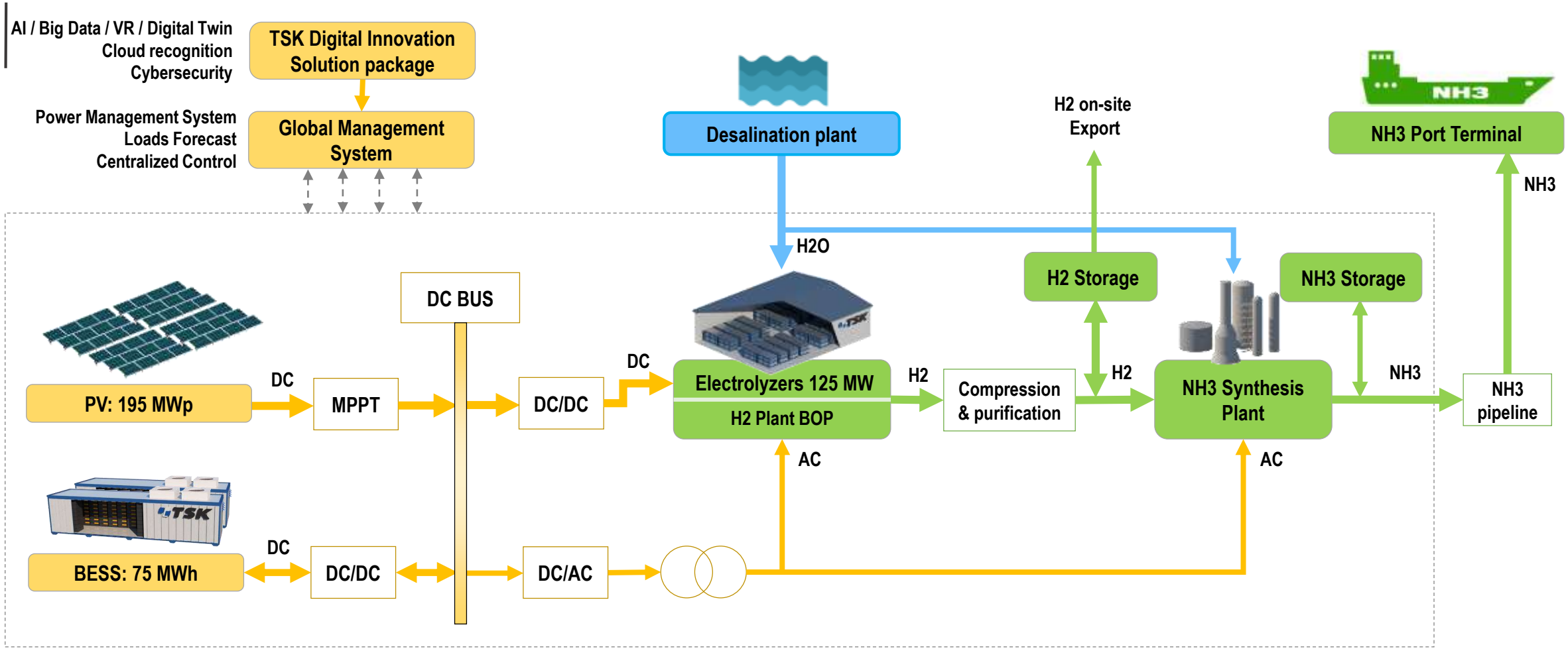

2. Hybrid projects

PV + Engines + BESS: San Fermín

014

Location	Loiza (Puerto Rico)
PV	27MW | 27 MWp
BESS	2MW |0.4MWh
Inverters	Schneider
Engines	4MW
Customer	URIEL INVERSIONES
Year	2014

Maria hurricane 2017

Inhouse meteo forecast

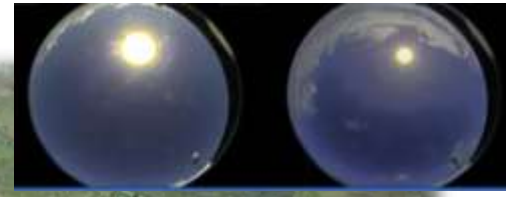

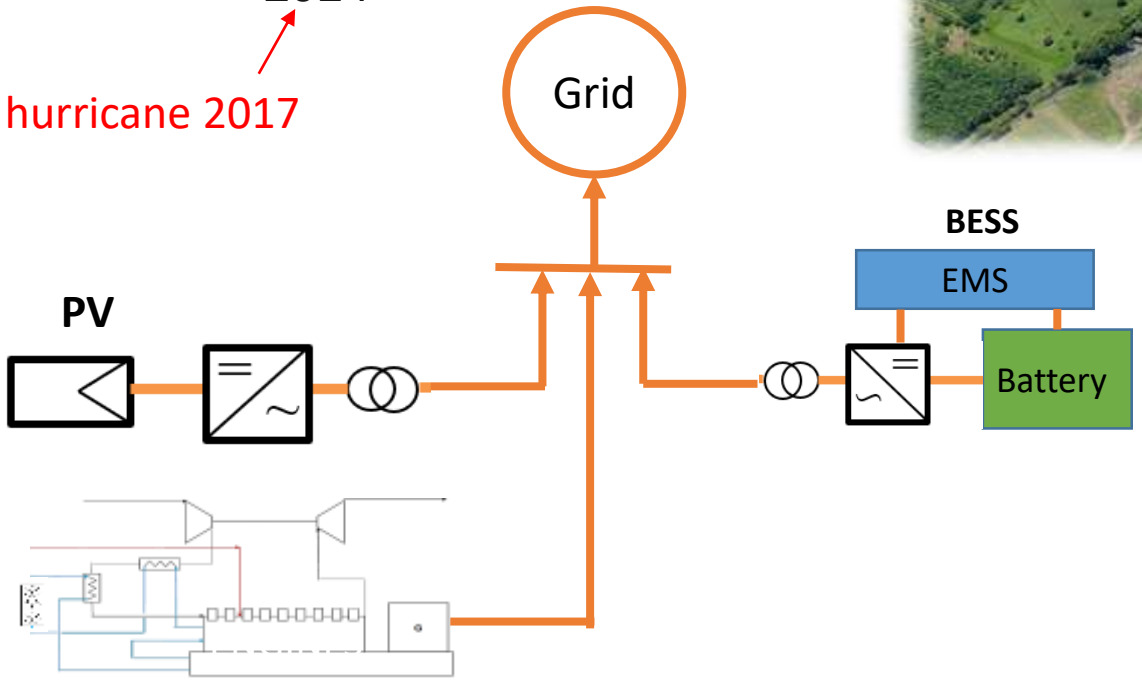

PV + BESS: LA PAZ

015

Location	La Paz (El Salvador)
PV	100 MWp
BESS	3,3MW | 2.23MWh
Customer	NEOEN
Year	2017

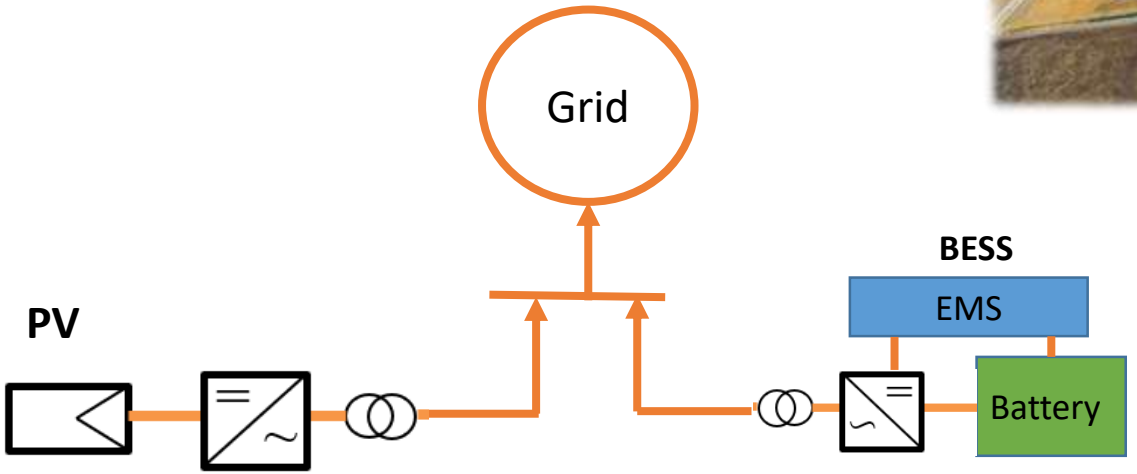

PV + BESS: Cuamba

016

Location	Cuamba (Mozambique)
PV	15MW | 19 MWp
BESS	1.9MW | 7.4MWh
Customer	GLOBELEQ
Year	In construction

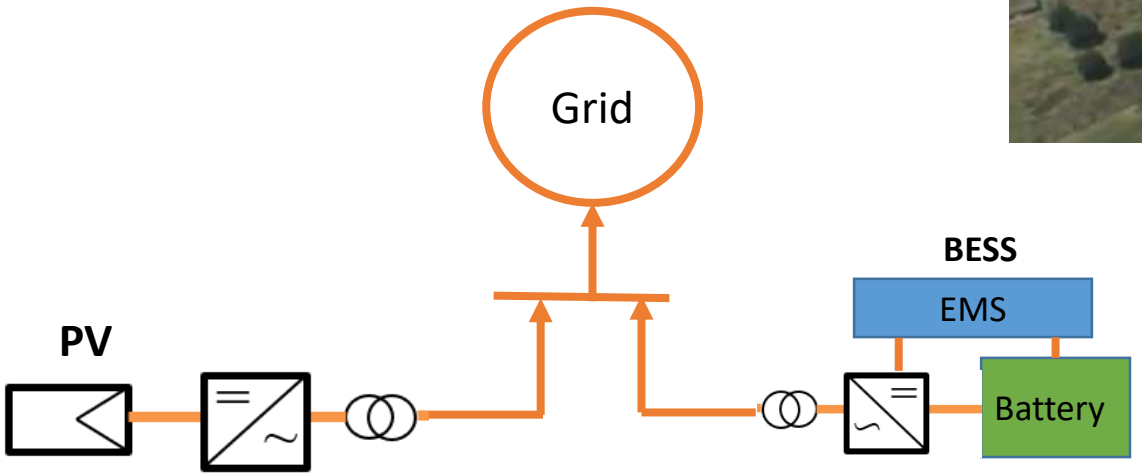

CSP + CCGT: Kuraymat ISCC

017

Location	Kuraymat (Egypt)
CCGT	140 MW
CSP	40 loops
Customer	NREA
Year	2011

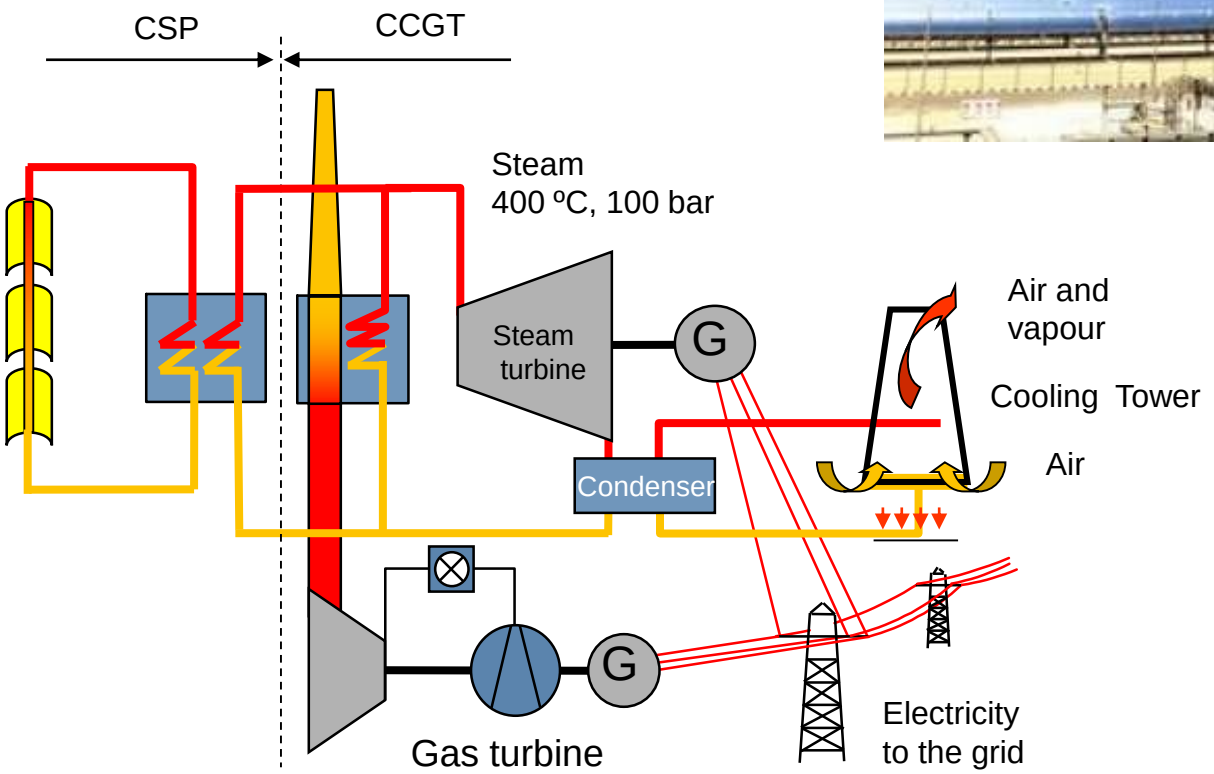

CSP + PV + eTES + BESS: MIDELT (Morocco)

018

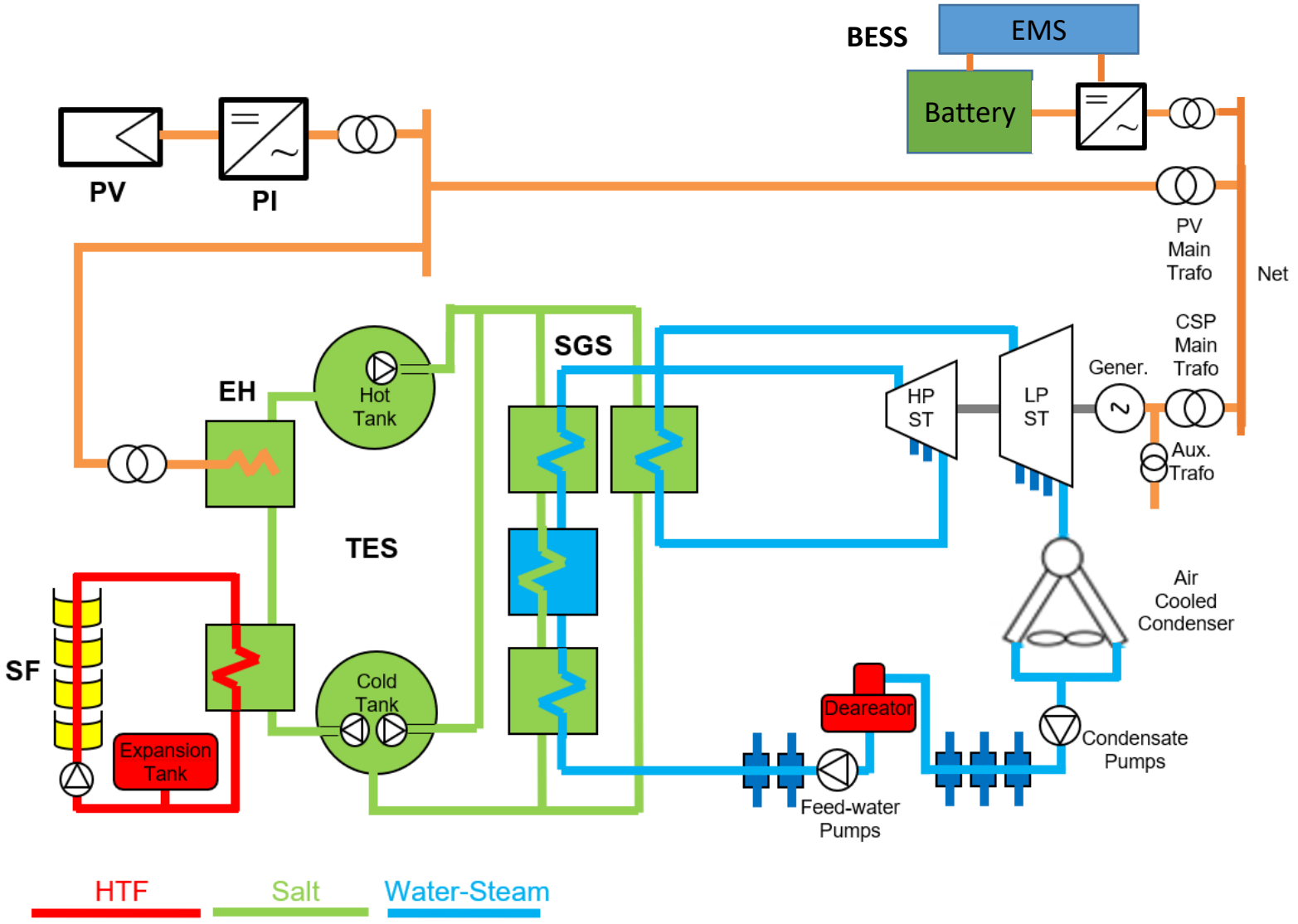

PV	**P**hoto**V**oltaic field
PI	**P**hotovoltaic **I**nverter
TC	**T**ransformation **C**entre
EH	**E**lectrical **H**eaters
SF	**S**olar **F**ield
TES	**T**hermal **E**nergy **S**torage
FH	**F**uel **H**eaters
SGS	**S**team **G**eneration **S**ystem

MIDELT DATA

019

Parameter	Unit	Value
Radiation (DNI)	kWh/m2·año	2504
PV Power	MWp	605
CSP loops	HelioTrough loops	38
TES	h	6
TES	MWh	2633
Equivalente electrical storage	MWh	1170
BESS	MW	12.5
BESS	MWh	62.5
Power (day, from PV)	MW	228
Power (night, from storage)	MW	195
Land use	ha	890
Production	GWh/año	1073
LEC	$/MWh	72

PV+CSP world record

eTES: Reusing an existing Rankine cycle (Germany, Spain)

020

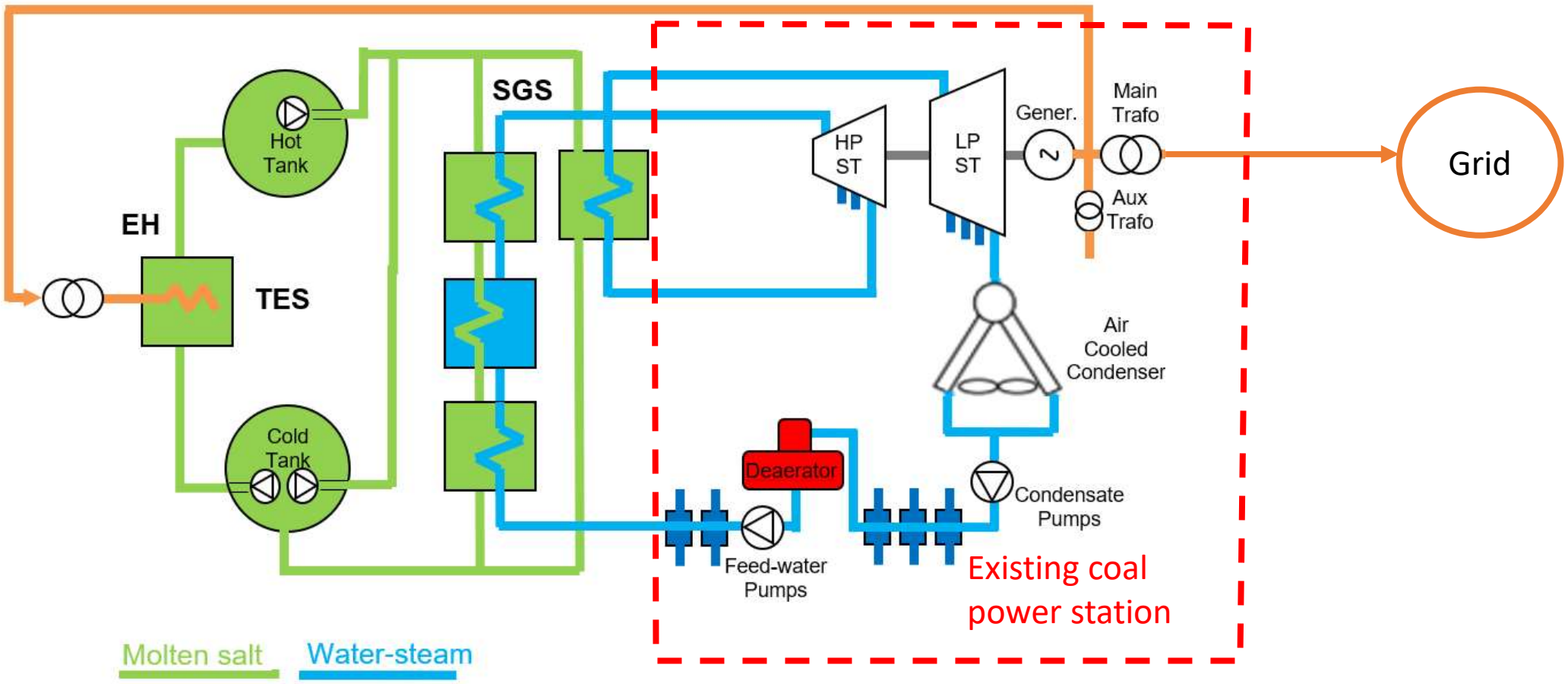

Engines + PV: Risk Mitigation Program (South Africa)

021

Location	Eastern Cape (South Africa)
Engines	198 MW
PV	180 MW | 216 MWp
Year	(contract phase)

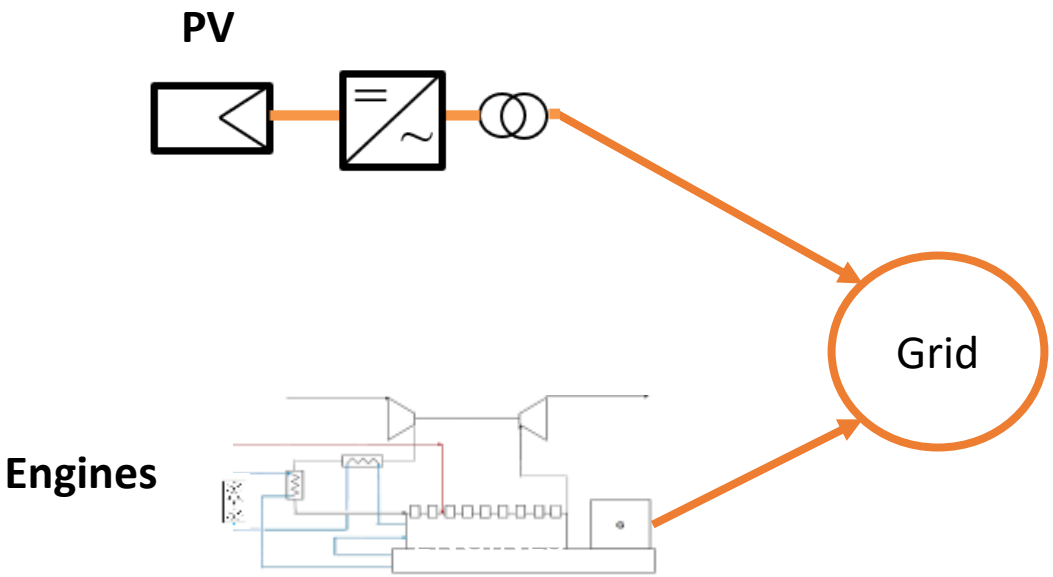

Engines + PV + Wind + BESS: Risk Mitigation Program (South Africa)

022

Location	Matjesfontein (South Africa)
Engines	96 MW
PV	140 MW | 155 MWp
Wind	83MW
BESS	66.4 MW | 198.6 MWh
Year	(contract phase)

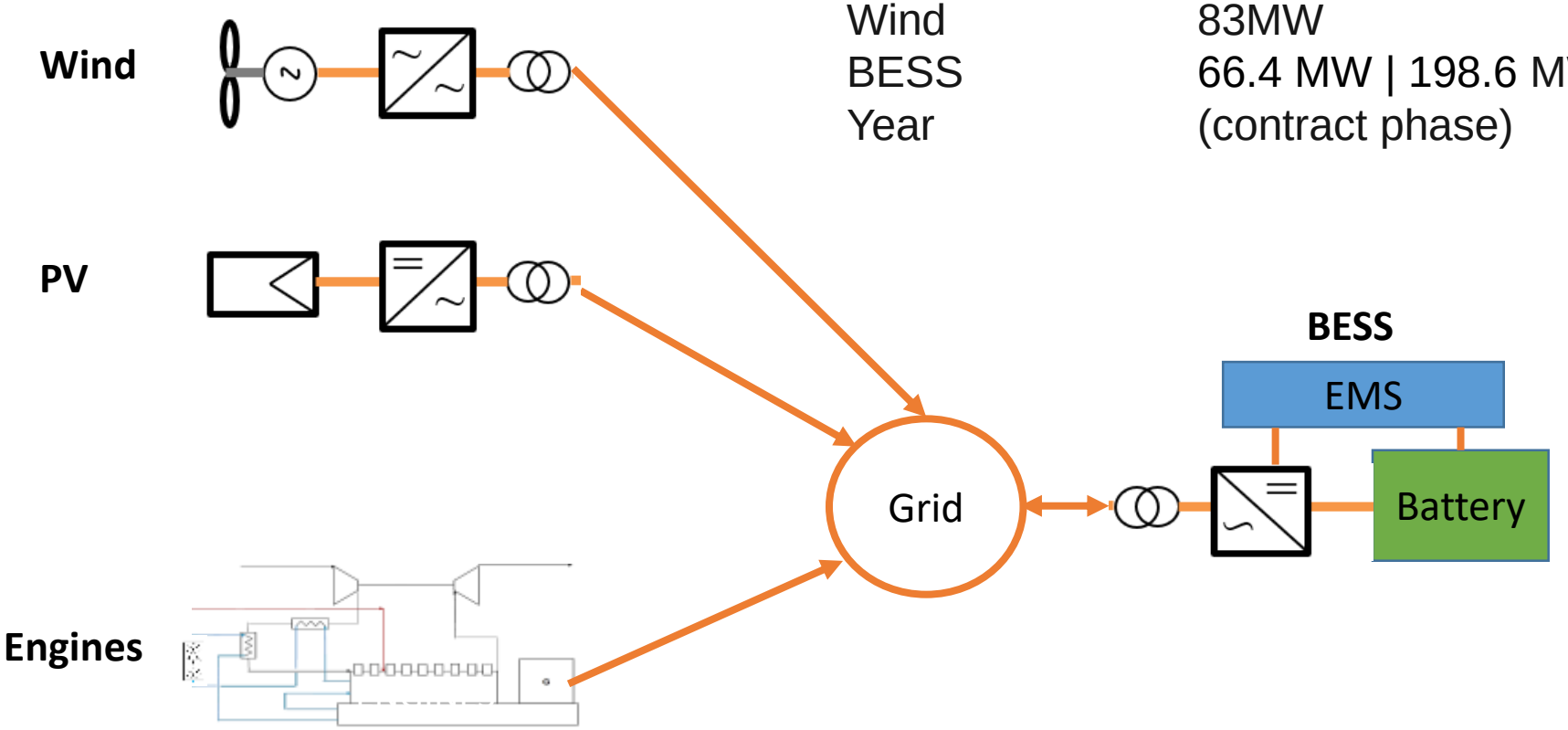

PV + CCGT + BESS: PERTAMINA (Indonesia)

023

Location	Several islands (Indonesia)
CCGT	165 MW
PV	1261 MW | 1216 MWp
BESS	970 MW | 2800 MWh
Customer	PERTAMINA
Year	(contract phase)

Land + floating

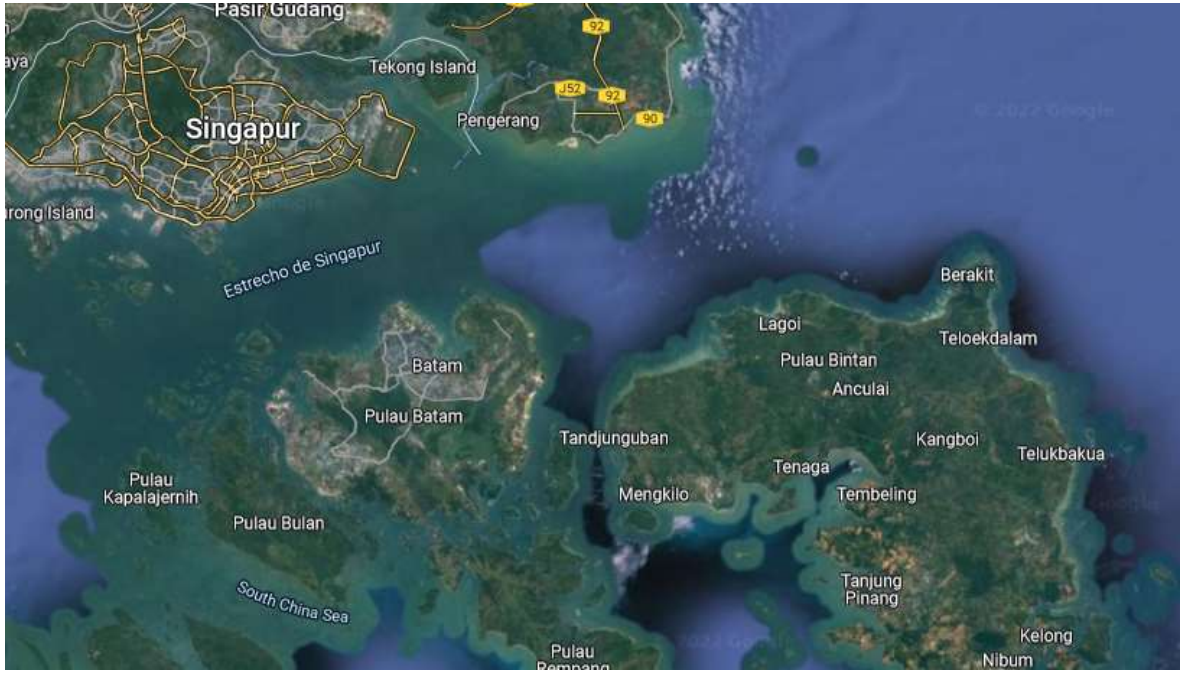

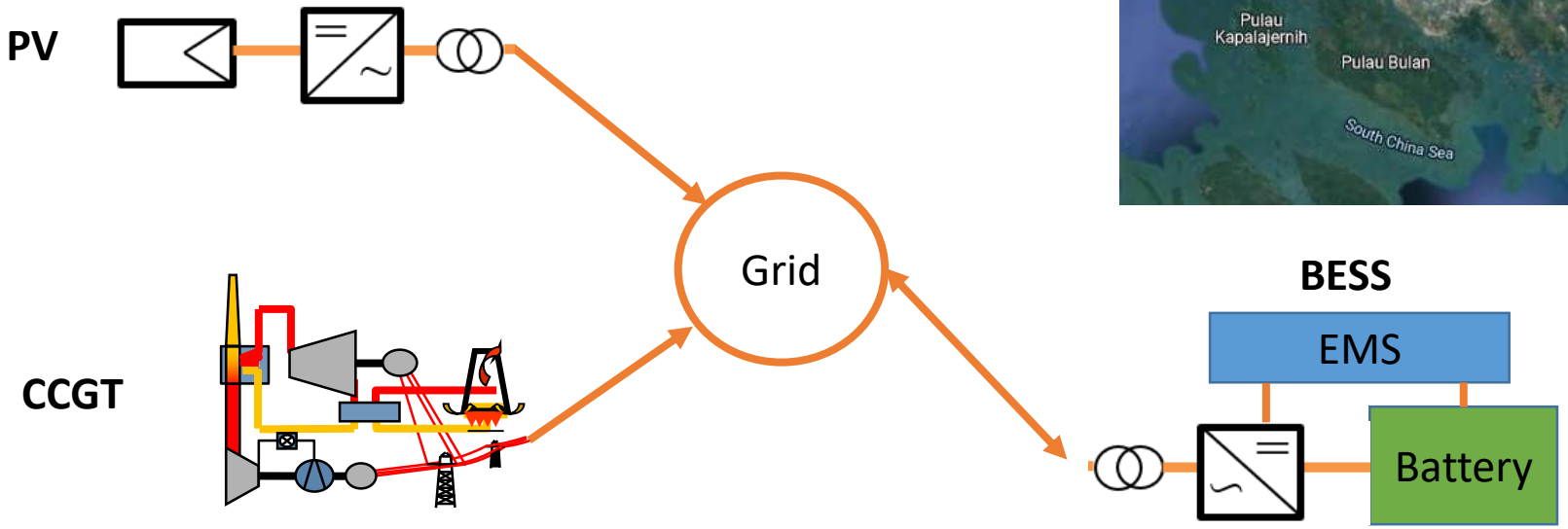

BESS References

024

Proyecto	Cliente	Pais	Fabricante	Capacidad
Providencia Solar	NEOEN	El Salvador	NIDEC/LG	6MW/3MWh
Capella Solar	NEOEN	El Salvador	NIDEC/LG	6MW/3MWh
San Fermín	URIEL	Puerto Rico	ALTAIRNANO	2MW/0.4kWh
Cuamba I	GLOBELEC	Mozambique	E22/CATL	1.9MW/7.4MWh
Jobos	AES	Puerto Rico	FLUENCE/CATL	100MW/400MWh
Salinas	AES	Puerto Rico	FLUENCE/CATL	100MW/400MWh

3. Potential solutions

026 Coal + CSP

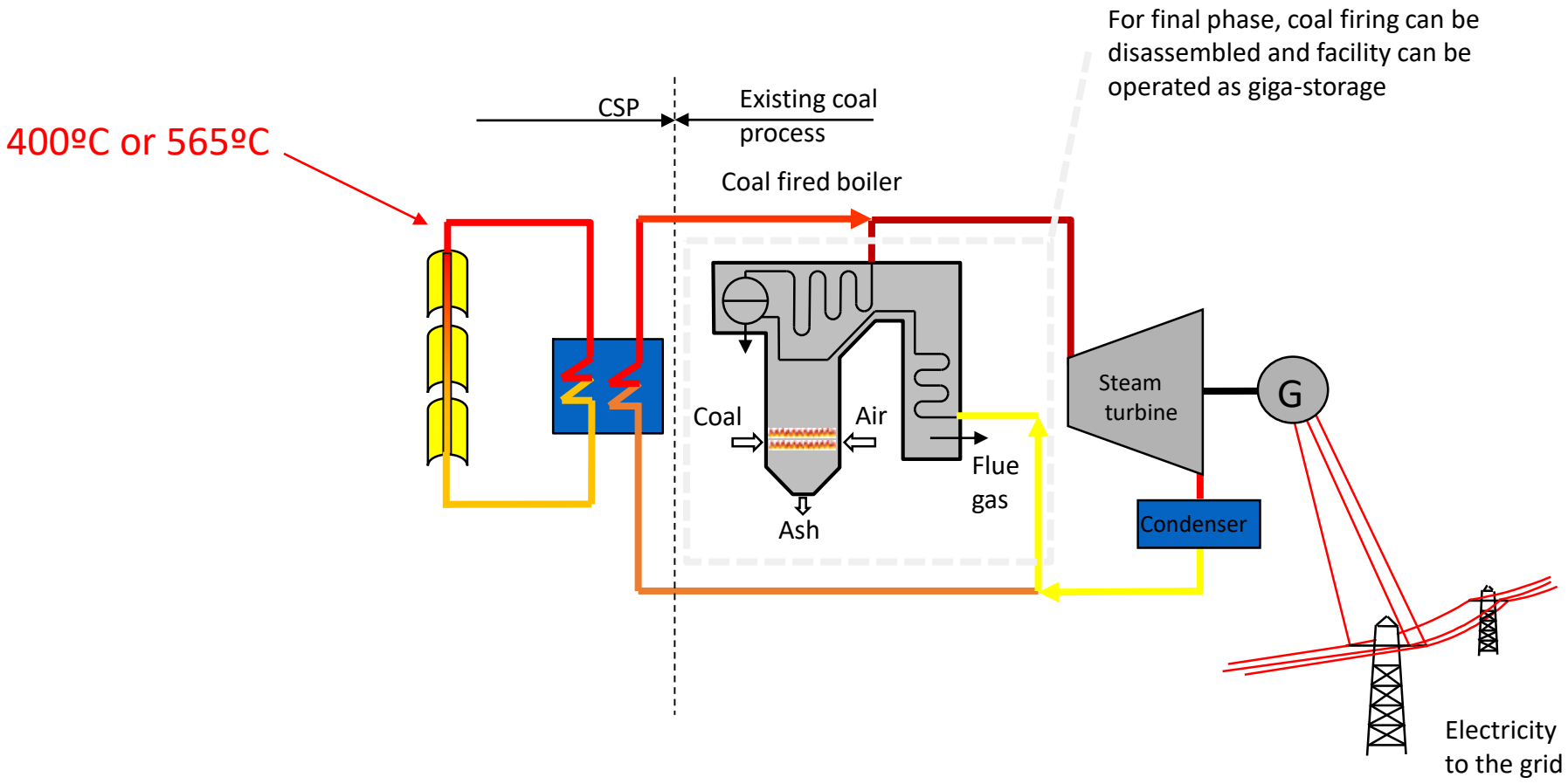
For final phase, coal firing can be disassembled and facility can be operated as giga-storage
CSP
Existing coal process
400ºC or 565ºC
Coal fired boiler
Coal
Air
Ash
Flue gas
Steam turbine
G
Condenser
Electricity to the grid

CCGT + CSP (like Kuraymat)

027

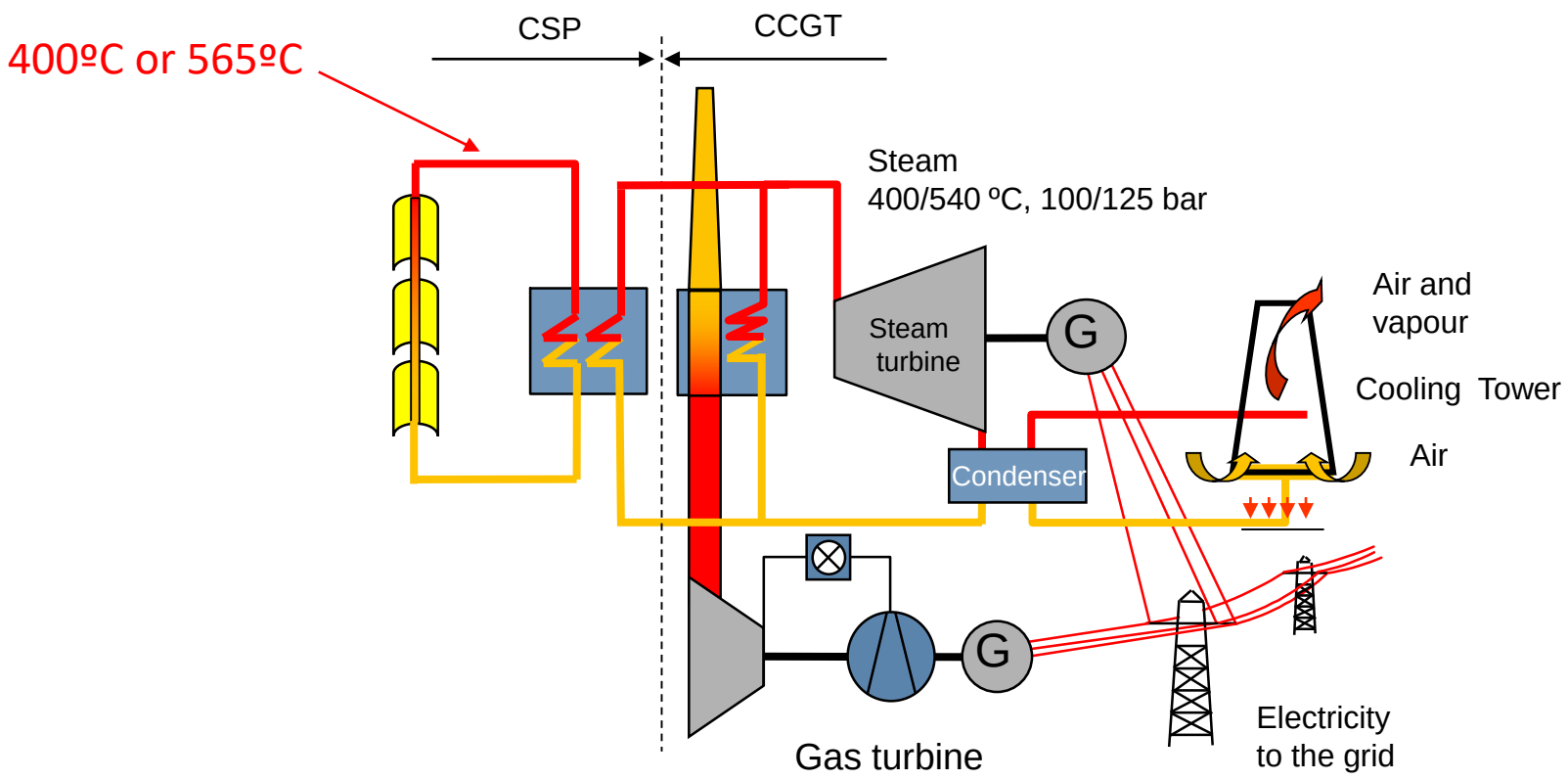

CCGT + CSP + eTES

028

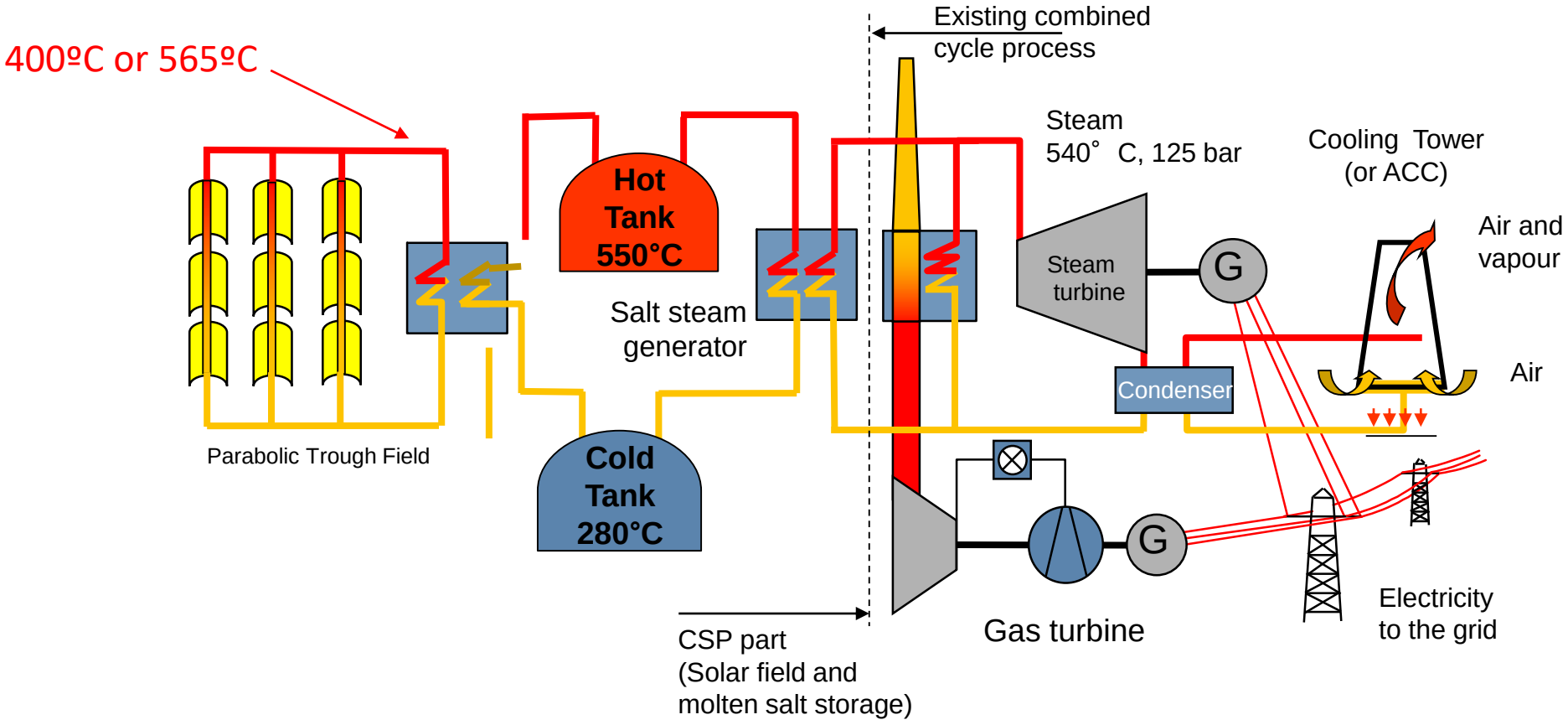

CCGT + CSP + eTES + Night purchase

029

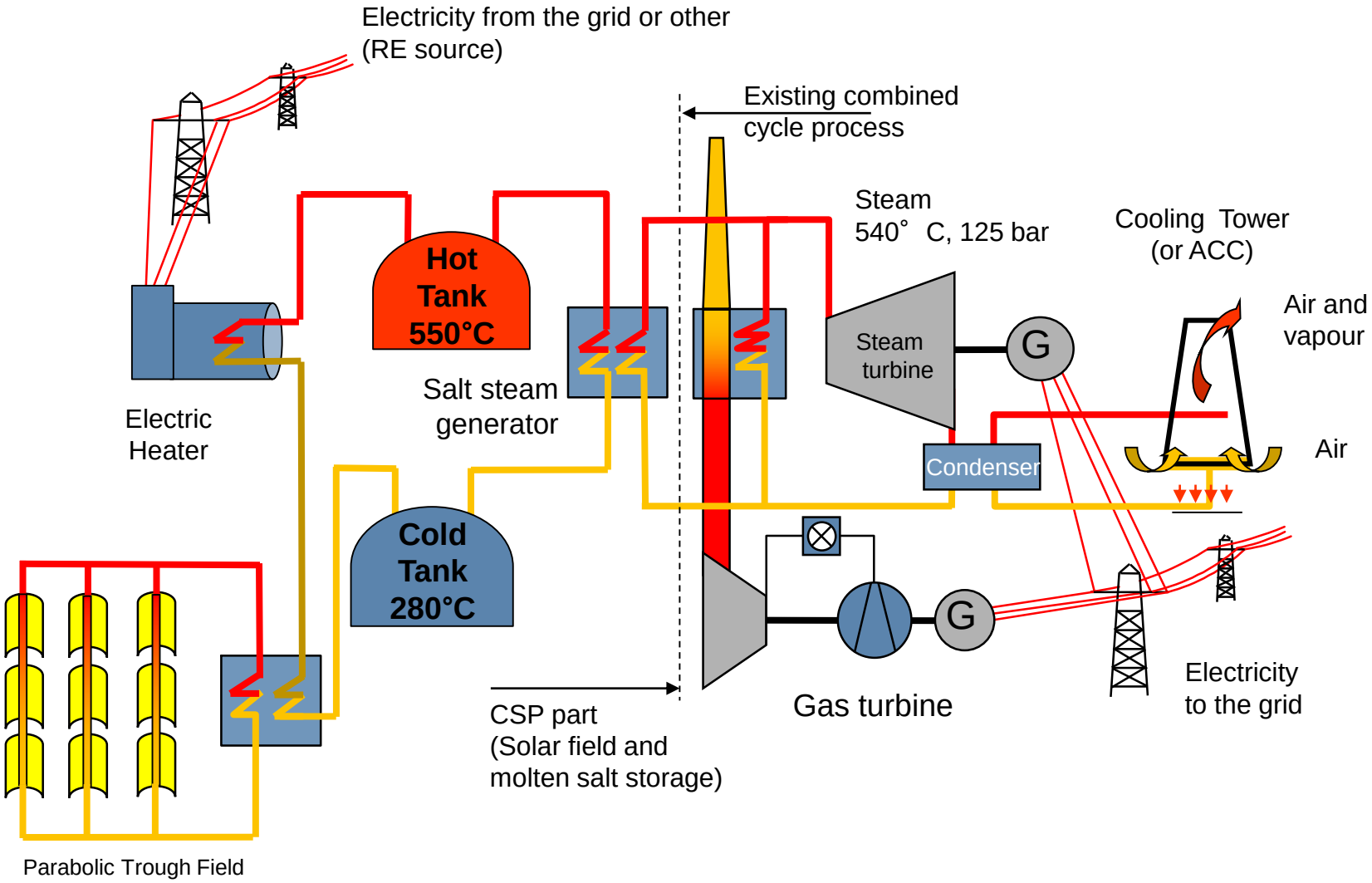

CCGT + PV + Grid+ CSP + eTES

030

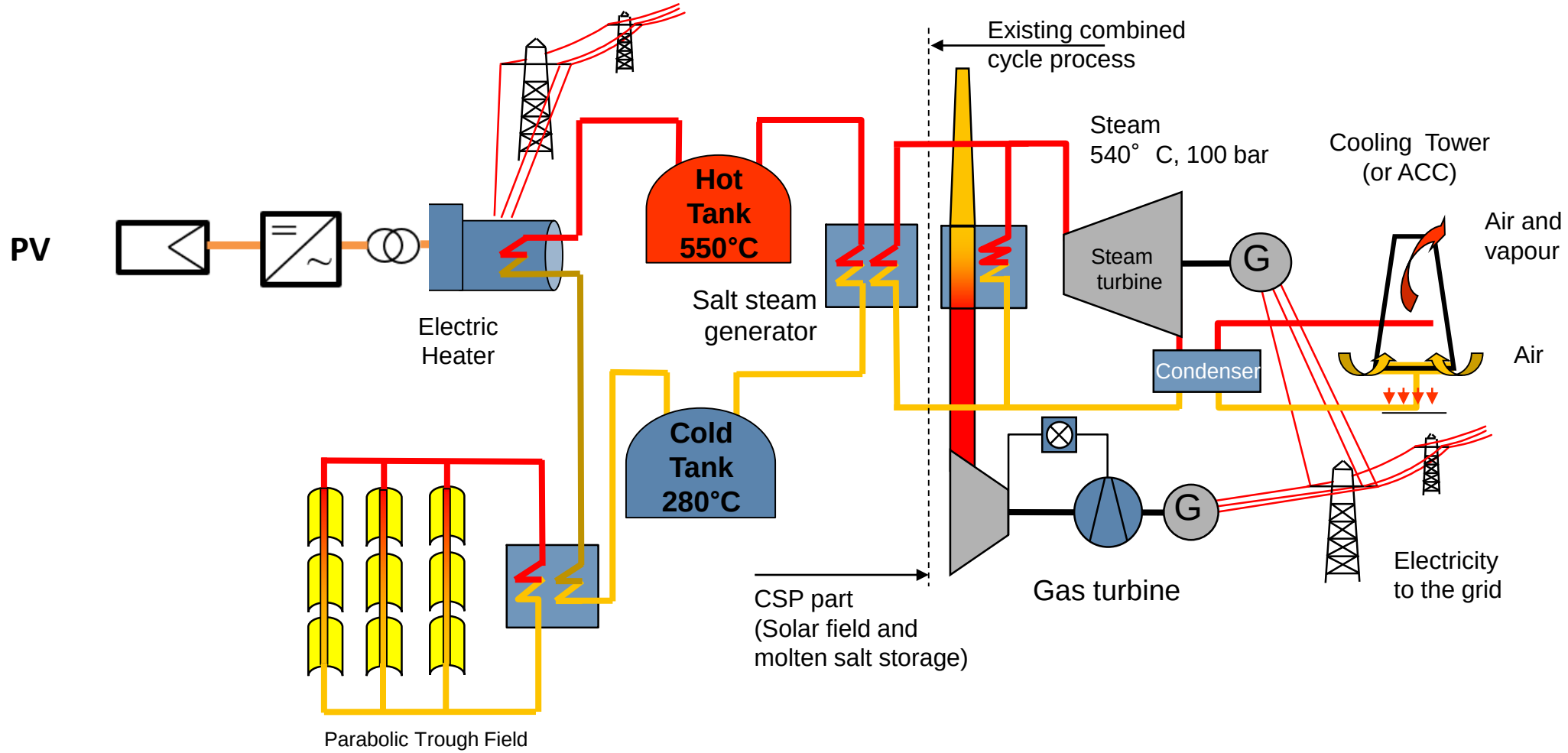

CCGT + PV + Wind + eTES

031

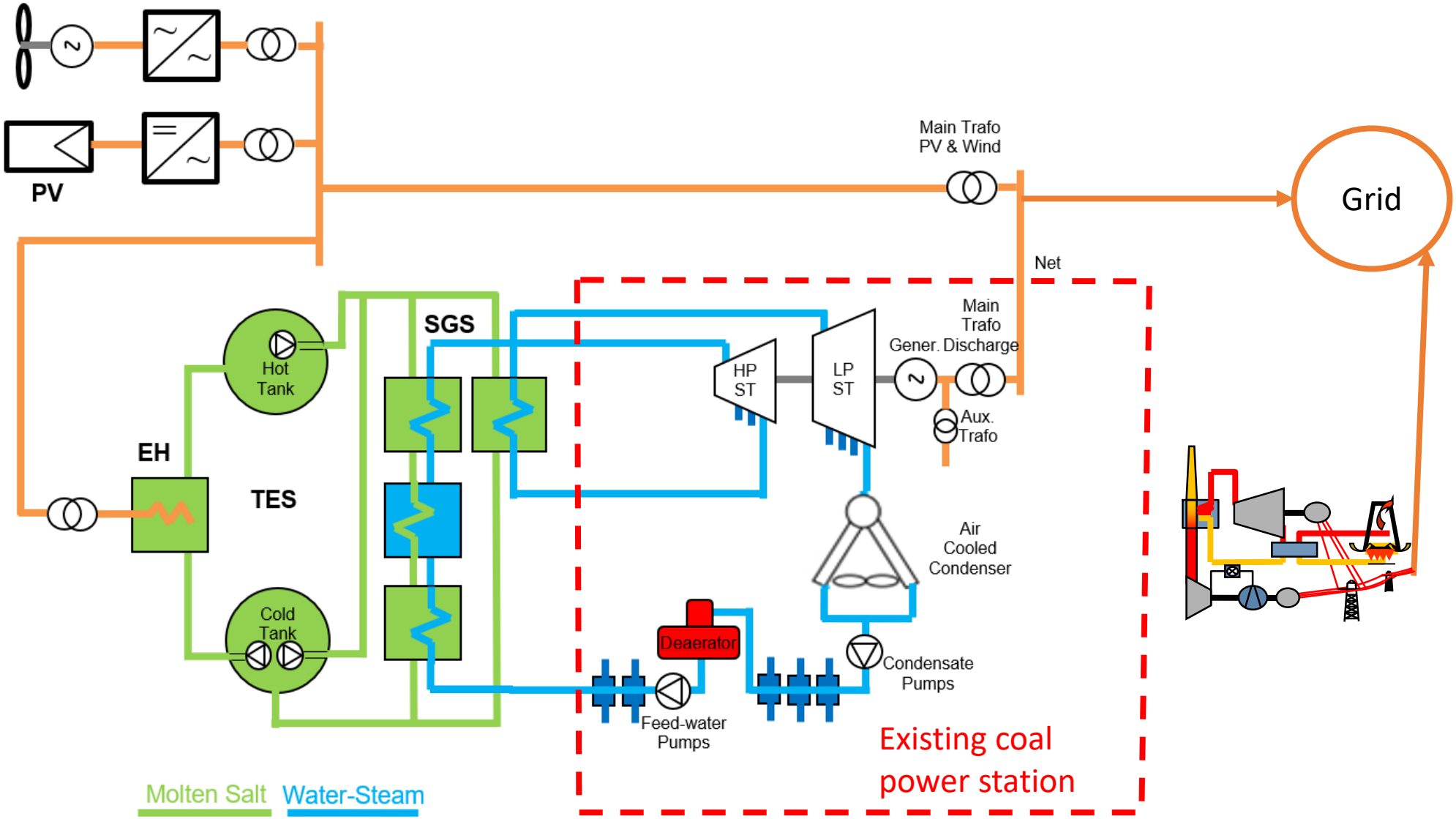

CCGT + PV + Wind + BESS

032

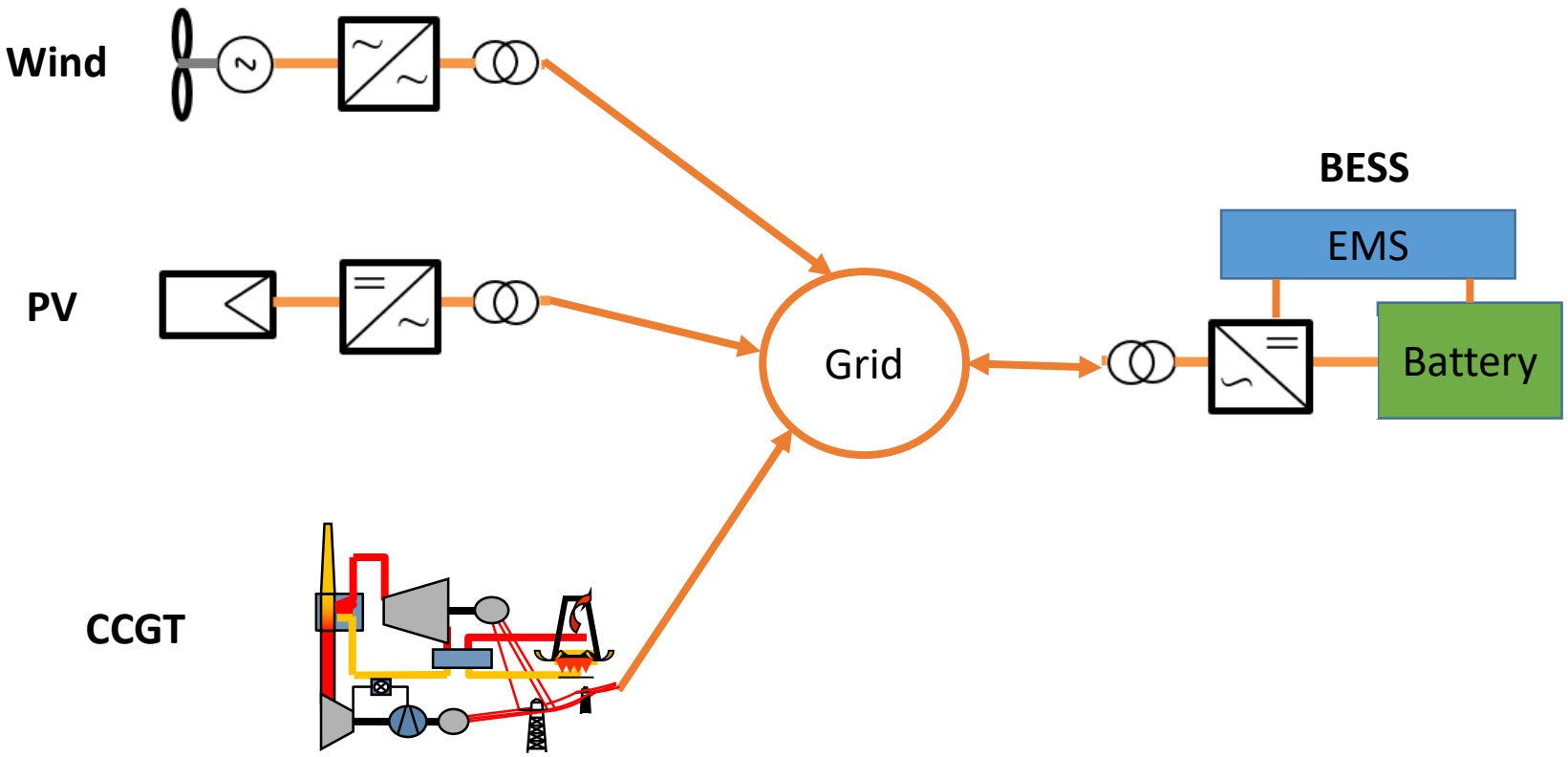

CCGT + PV + Wind + CSP + BESS

033

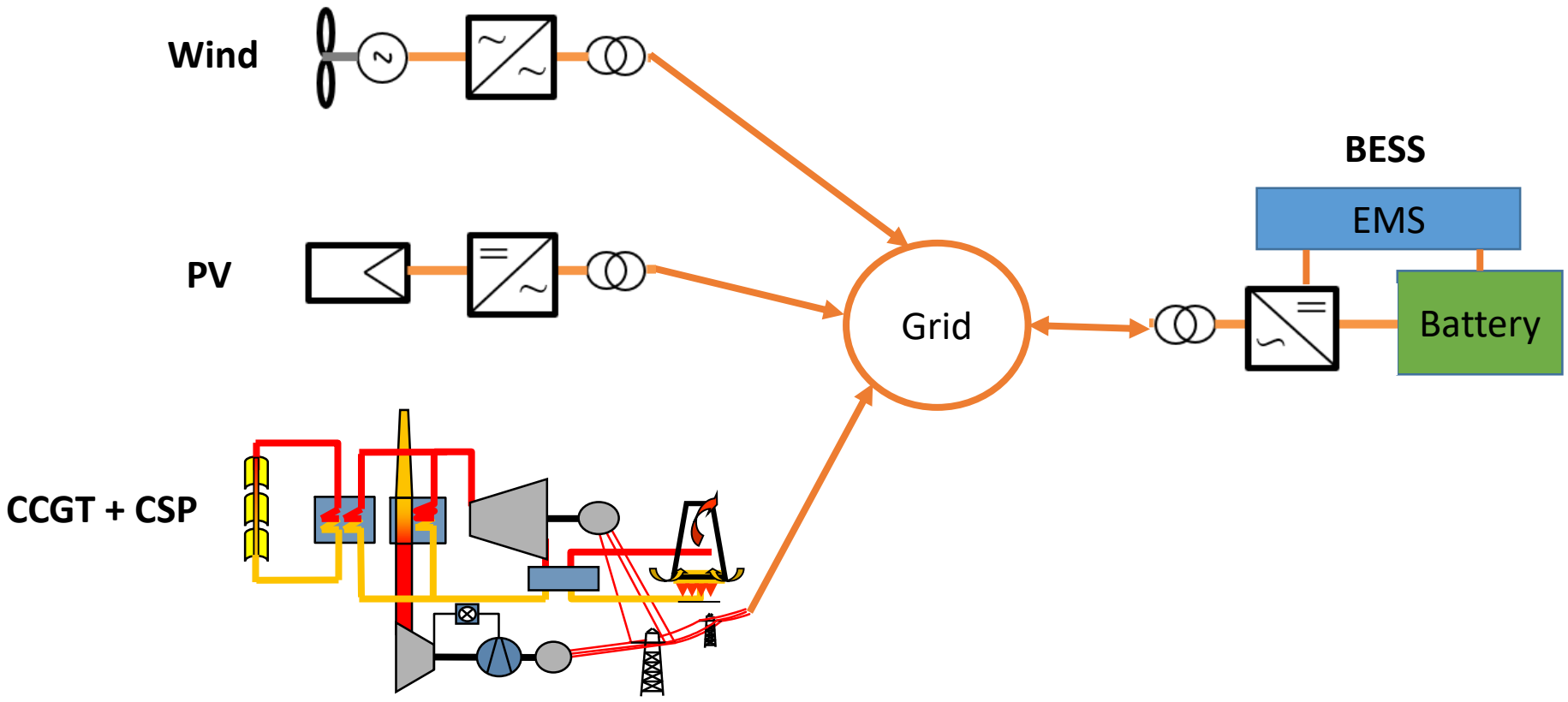

CCGT + PV + Wind + CSP + eTES + BESS

034

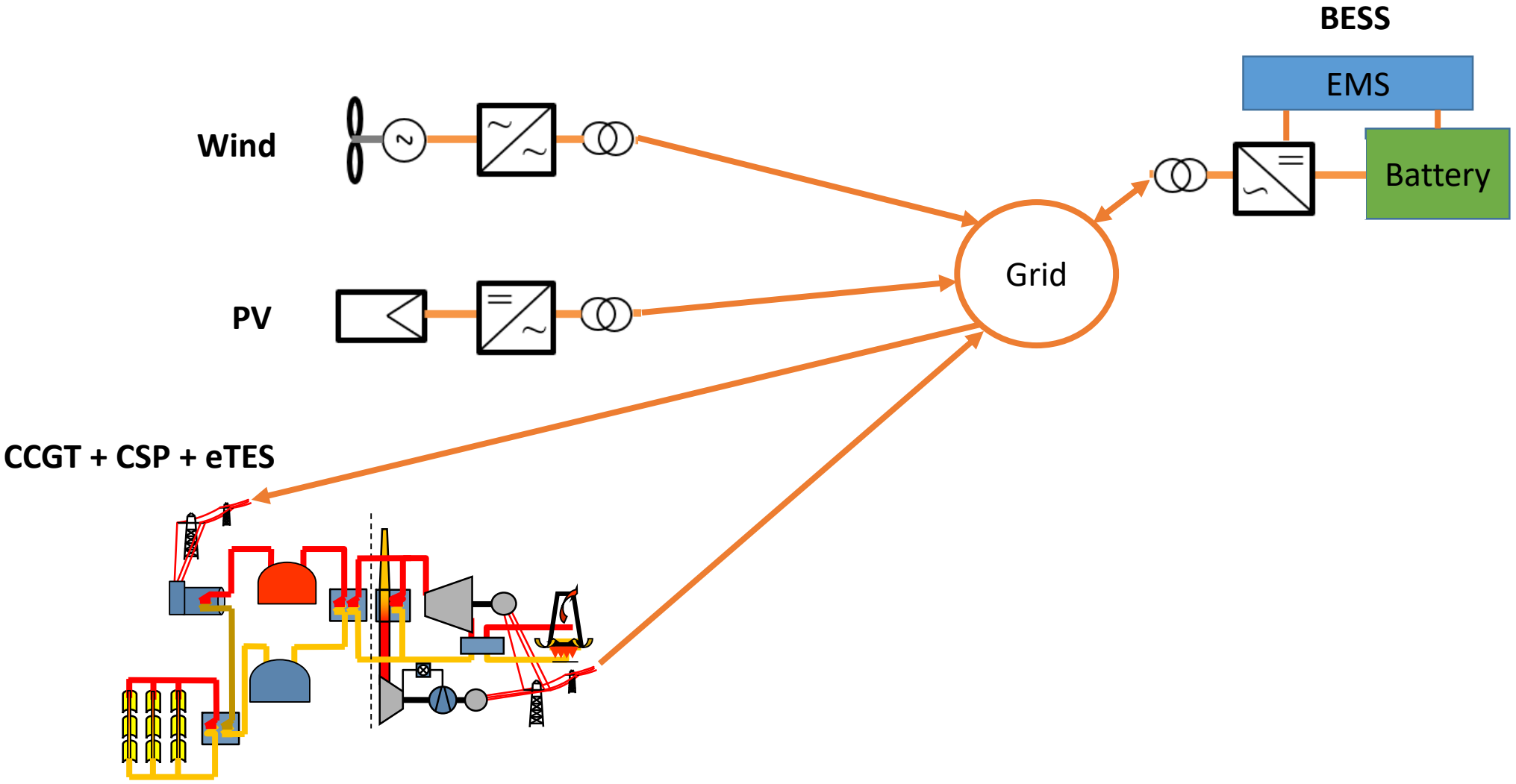

Appendix: eTES and LAES comparison with other technologies

COMPARISON WITH OTHER SYSTEMS (BESS, ETC.)

Comparison with BESS:

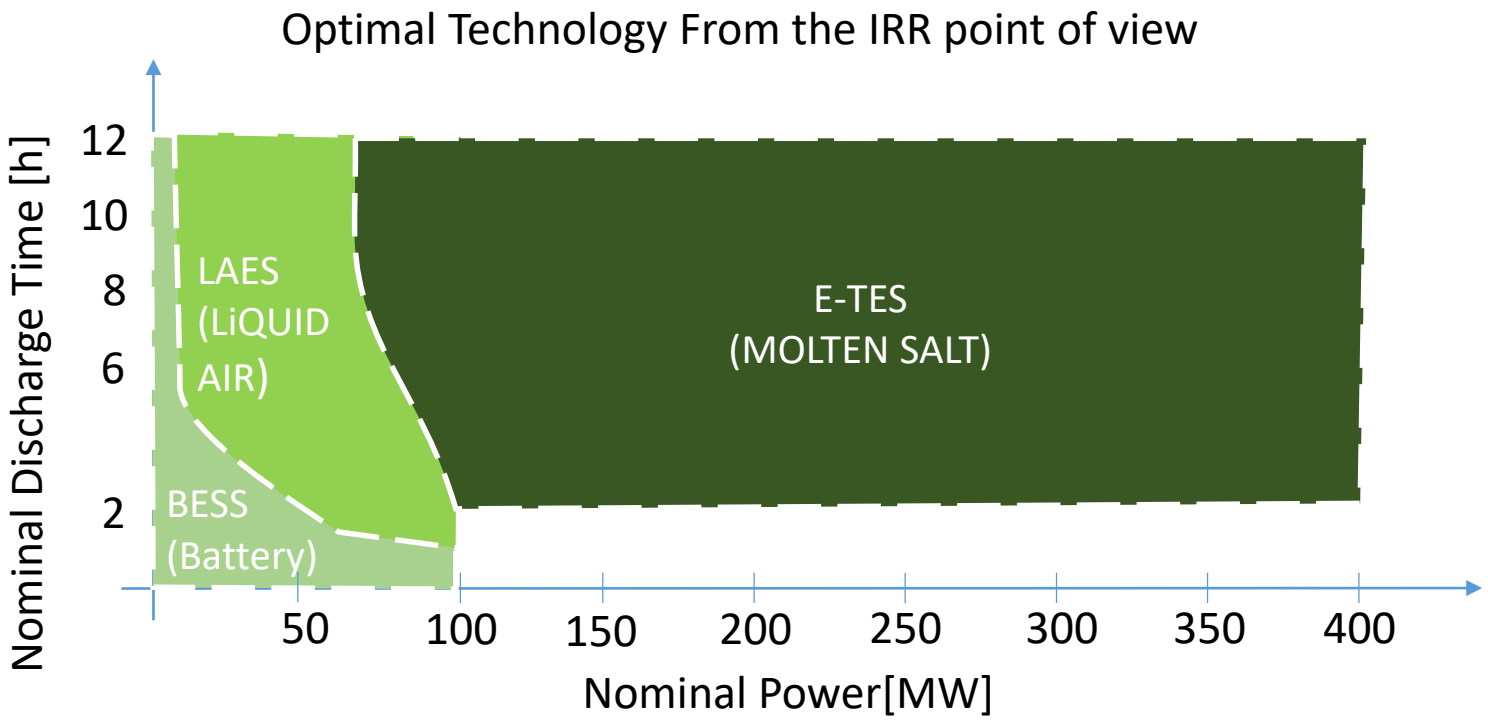

COMPARISON WITH OTHER SYSTEMS (BESS, ETC.)

ADVANTAGES:

- Low **cost** (in comparison with BESS, taking into account the O&M).
- Does not use **critical** materials (like lithium, vanadium, etc.).
- No **degradation**: No need to renew storage elements.
- Does not generate **residuals** to be processed.
- Non **dangerous**: Non explosive.
- **No technology risk**: Proven tecnologies (eTES comercial, LAES tested on 2 prototypes).
- **Site independent.**
- Able to supply all **ancillary services**.
- Molten salt termal energy storage **reuses old coal power stations.**

DISADVANTAGES:

- Relatively low **global efficiency** (40% for eTES, 60% for LAES).

El innovador sistema, único en el mundo, permite liberar la superficie del terreno de juego para realizar cualquier otro tipo de actividad, conservando y manteniendo el césped en perfectas condiciones dentro de un invernadero bajo rasante construido bajo el Estadio.

GRACIAS
POR SU ATENCIÓN.